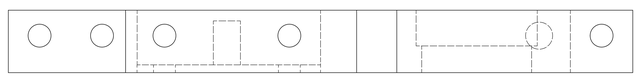

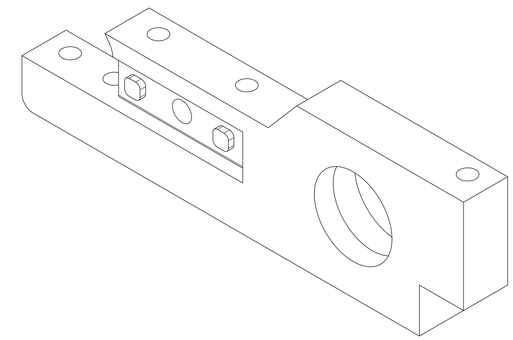

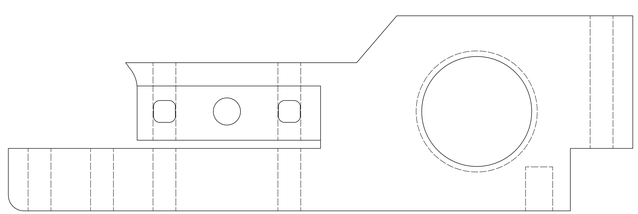

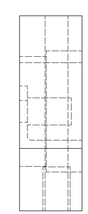

This drawing is the sole property of Arkansas Tech University. It is provided on the condition that it will not be used in any way that is harmful to the university's interests.
By accepting or using this drawing, you agree to this condition and acknowledge Arkansas Tech University's exclusive ownership.

TOLERANCES: UNLESS OTHERWISE SPECIFIED	
NO DECIMAL	X. ± 1
1 PLACE DECIMAL	X.X ± .03
2 PLACE DECIMAL	X.XX ± .01
3 PLACE DECIMAL	X.XXX ± .005
ANGLES	X° ± 15'

Upper Stage Composite

DRAWN: DATE:
CHECKED: SCALE:

SHEET: